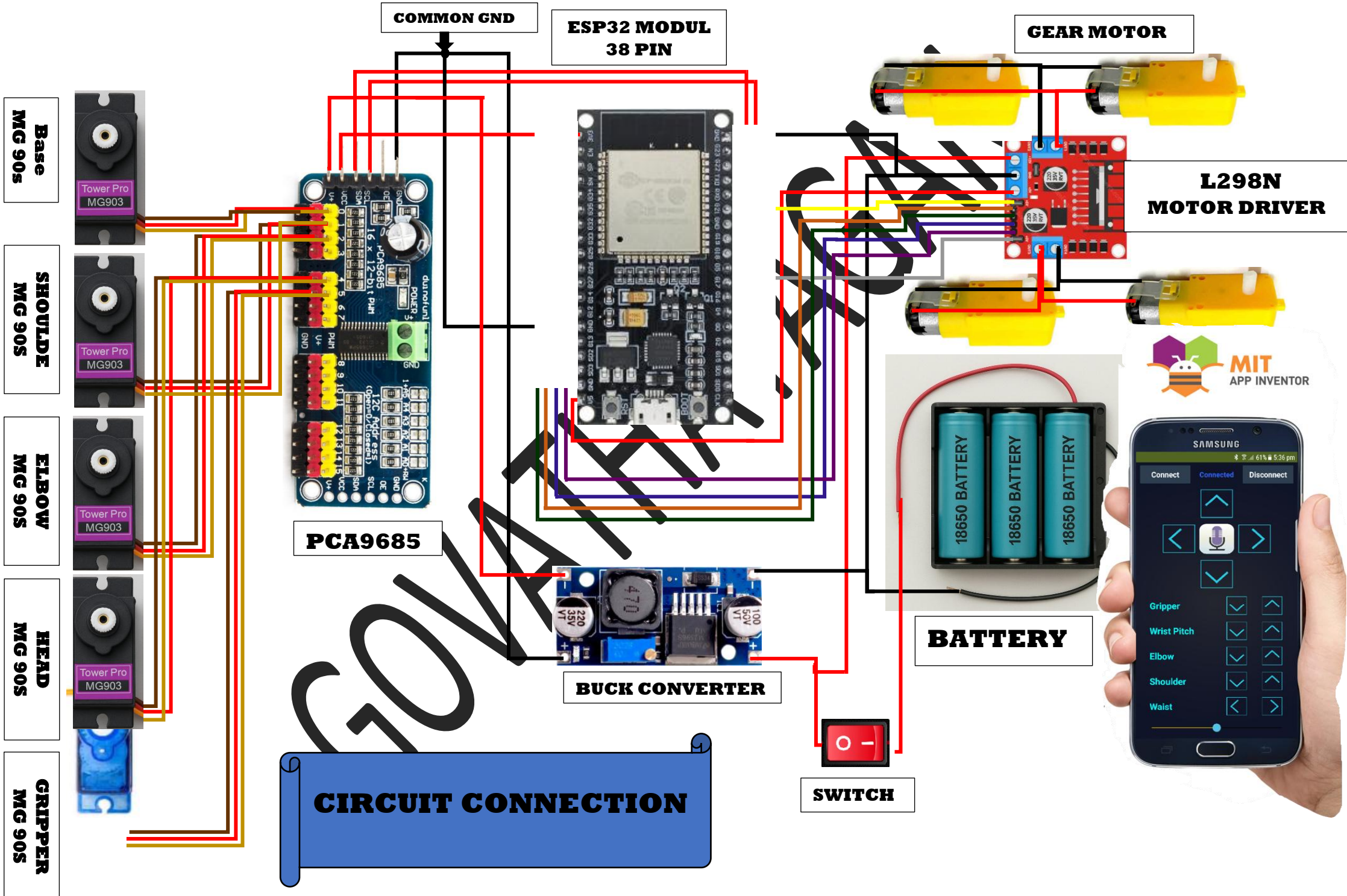
COMMON GND
ESP32 MODUL
38 PIN
GEAR MOTOR
L298N
MOTOR DRIVER
Base
MG 90s
SHOULDE
MG 90S
ELBOW
MG 90S
HEAD
MG 90S
GRIPPER
MG 90S
Tower Pro
MG903
PCA9685
BUCK CONVERTER
SWITCH
BATTERY
18650 BATTERY
18650 BATTERY
18650 BATTERY
MIT
APP INVENTOR
SAMSUNG
Connect
Connected
Disconnect
Gripper
Wrist Pitch
Elbow
Shoulder
Waist
CIRCUIT CONNECTION